TAKSTAR® 得胜

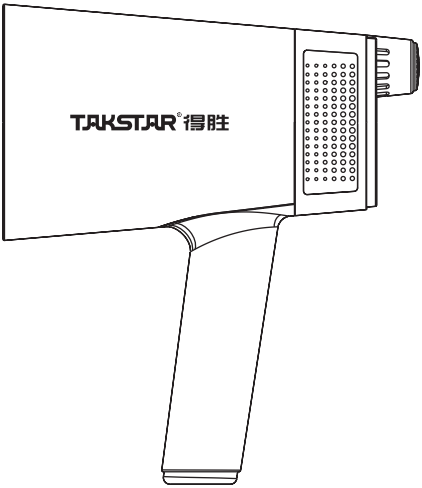

ME30 | 喊话器
Megaphone

使用手册 User Manual

■ 前言

尊敬的用户：

感谢您选购得胜ME30喊话器，为了您能够更好地了解使用本产品，建议您在使用前仔细阅读本说明书。

若存在有疑问或者您有宝贵的建议，可通过拨打得胜官方服务热线400 6828 333或微信扫描二维码关注得胜官方公众号与我们联系。

■ 产品特性

- 突破传统造型，小巧轻便，握感舒适，适合长时间手持扩音及K歌娱乐；
- 30W峰值功率全频喇叭，音域宽低频饱满，声音响亮不刺耳；
- 采用高灵敏度咪芯，轻松拾音，声音大，更好的保护嗓子；
- 内置大容量4000mAh锂电池，超长续航约20小时；
- 内置DSP音频处理模块，有效抑制刺耳啸叫声；
- 多种音效模式，喊话、K歌一键快速切换，操作简单；
- 支持无线播放功能，简化线材连接，畅享音乐更方便自由；
- 内置300秒录音及外置U盘录音，满足宣传促销等语音录制；
- 高清显示屏，实时电量、音量等关键信息一目了然；
- 节能省电设计，停止使用15分钟后自动关机。

■ 适用范围

- 适用人流疏导、政企单位、安检巡逻、导游、促销户外活动等场景

■ 产品配置

ME30喊话器 ……1个

Type-C充电线……1条

手绳……1条

说明书……1份

■ 技术参数

主机参数

- 频率响应：150Hz-12kHz
- 峰值功率：30W
- 扬声器阻抗：4Ω
- 总谐波失真：THD≤5% 1kHz@4R,4W
- 信噪比：80dB (A-Weighted)@1W 4Ω
- 主芯片：DSP
- 无线连接版本：V5.3
- 混响模式：Reverb
- 工作电压：3.4V-4.2V
- 电池类型：锂离子电池
- 电池容量：3.7V/4000mAh
- 充电方式：5V⎓1A
- 充电时间：约4小时
- 工作电压范围：3.4V-4.2V
- 使用时间：约20小时（喊话模式）
- 产品重量：约350g
- 产品尺寸：Φ189mm*99mm*196mm

音头参数

- 拾音器：背极式驻极体
- 指向性：超心型
- 频率响应：60Hz-16kHz
- 灵敏度：-42±2dB(0dB=1V/Pa，at 1kHz)

注：以上数据由得胜实验室测试得到，并拥有最终解释权！

■ 功能示意

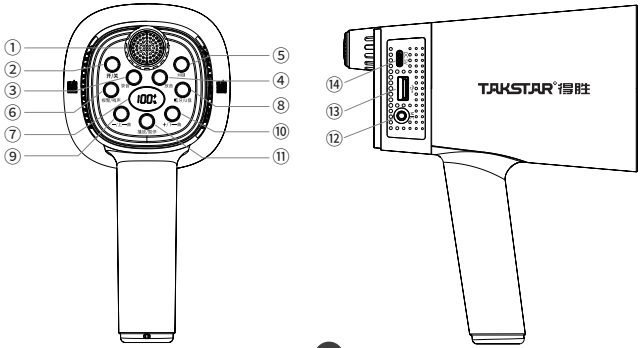

① 麦克风：使用时请对准麦克风讲话，建议保持10-20mm的拾音距离。

② 电源开关：长按2秒开机/关机；双击开启或关闭麦克风；在任意工作模式下，无使用15分钟后将自动关机。

③ 录音键：点按进入录音模式，具体操作详见说明书“录音和放音功能使用”部分。

④ 放音键：录音完成后，点按自动循环播放录音内容。

⑤ M模式切换键：循环切换3种工作模式：喊话模式、演讲模式、K歌模式，并有对应语音提示。（出厂默认喊话模式，下次开机记忆上次模式）

⑥ 报警/哨声：点按循环切换报警声、哨声，再次点按关闭。

⑦ 数码显示屏：显示当前电量百分比、音量大小、工作状态等信息。

⑧ 蓝牙/U盘键：点按开启/关闭蓝牙，长按断开蓝牙；在插有U盘情况下，点按可选择蓝牙/U盘播放，屏幕对应显示BL/UP。

⑨ -/上一曲键：点按音量减少，长按切换上一曲。

⑩ +/下一曲键：点按音量增加，长按切换下一曲。

⑪ 播放/暂停键：点按控制音频播放和暂停；U盘模式下，长按切换“单曲模式”、“循环模式”。

⑫ MIC麦克风输入接口（Ø3.5mm）：支持外接麦克风使用，接入后内置麦克风自动关闭。

⑬ U盘接口：将U盘插入接口进行音频文件播放或实现录音功能。

⑭ Type-C充电接口：连接Type-C充电线为喊话器充电。

注：在播放音乐或录音时，无需喊话可关闭麦克风，避免引起啸叫。

■ 使用说明

一、无线播放配对方法

首次使用无线连接功能时，需要与手机或其他智能设备配对连接，操作步骤如下：

1. 点按“蓝牙/U盘键”打开无线连接功能，屏幕显示“BL”闪烁；
2. 进入手机的“设置”菜单，开启手机的无线播放功能，搜索“TAKSTAR ME30”并点击连接，成功后伴有提示音；
3. 下次开机后，如果是已进行过无线连接，将自动回连最后一次使用的设备。

二、录音和放音功能使用说明

1. 内置录音/放音

点按“录音键”，显示屏“RC”闪烁2次并发出提示音，进入录音模式，录音时长从05（5分钟/300秒）开始，到00时自动结束并保存内容循环播放。录音过程中，再次点按“录音键”或“放音键”可提前停止录音并循环播放。

注：内置录音只能录一个音频文件，下次录音时会覆盖上次的音频文件。

2. 外置U盘录音/放音

在插入U盘状态下，点按“录音键”进入录音模式，显示屏“RC”闪烁2次，开始录音并同步显示录音时长；录制过程中，再次点按“录音键”或“放音键”可提前停止录音并循环播放。

注：外置U盘录音可录多个音频文件，储存量根据U盘内存大小决定，最大支持64G。

三、充电与电量指示

状态	屏幕显示
开机状态	充电中：屏幕显示CH及 ϟ 符号闪烁
	充满电：ϟ 符号常亮，电量显示100%
关机状态	充电中：屏幕显示 ϟ 符号闪烁
	充满电：ϟ 符号常亮

■ 安全警示

为避免电击、高温、着火、辐射、爆炸、机械危险以及使用不当等可能造成的人身伤害或财产损失，使用本产品前，请仔细阅读并遵守以下事项：

1. 使用产品时请确认所连设备与本产品是否匹配以及合理调整音量大小，不要在超过产品功率及大音量下长时间使用，以免造成产品异常；
2. 使用中若发现有异常（如冒烟、异味等），请立即关闭电源开关并拔掉电源插头，然后将产品送售后服务网点检修；
3. 消费者若使用电源适配器供电，则应购买配套使用获得CCC认证并满足标准要求的电源适配器；
4. 本产品及附件都应放置在室内干燥通风处，请勿长期存放在潮湿、灰尘多的环境，使用中避免靠近火源、雨淋、进水、过度碰撞、抛掷、振动本机及覆盖通风孔，以免损坏其功能；
5. 若产品需要固定于墙壁或天花板时，请确保固定到位，防止因固定强度不足导致产品发生跌落危险；
6. 使用该产品时需遵守相关安全规定，法律法规明确禁止使用场合请勿使用本产品，以免导致意外事故；
7. 请不要自行拆机改装或维修，以防止出现人身伤害，如有问题或服务需求请联系当地售后服务网点跟进处理。

■ 关于图标含义解释

CE 根据RL2004/108/EG和European Low Voltage Directive（欧洲低电压指令）RL2006/95/EG的测试结果表明，本产品符合欧共体关于电磁兼容性的成员国法律整合的指令中所规定的限值。

FCC 未经合规方明确批准的变更或修改可能会使用户失去操作设备的权限。此设备符合FCC规则第15条部分的要求。操作须符合以下两个条件：

（1） 此设备可能不会造成有害干扰，

（2）此设备必须接受接收到的任何干扰，包括可能导致意外操作的干扰。

此符号表示，根据WEEE指令(2012/19/EU)和国家法律，由于这种类型的废弃物会有潜在的有害物质，可能对环境和人类健康产生负面影响，所以本产品不应与您的家庭垃圾一起处置，应将本产品交由授权的电气和电子设备（WEEE）回收站回收。同时，您在正确处理本产品的同时将有助于自然资源的有效利用。如需了解更多有关您可以在何处放置废物回收设备的信息，请联系您当地的城市办事处、废物管理局或家庭废物处理服务部门。

■ 关于本说明书

本说明书中内容符合截止印刷之日的技术规格。由于得胜公司会不断改进产品，本说明书可能不符合您的特定产品的技术规格。要获取最新版说明书，请访问得胜官网，然后下载说明书文件。技术规格、设备或另售的附件在各个地区可能有所不同，如有问题请与当地得胜销售网点确认。如需更多支持和深层产品信息，请浏览得胜官方网站：

https://www.takstar.com

版权所有 ©2026 得胜。得胜、TAKSTAR及其各自标志是得胜公司在中国和/或其他国家/地区的注册商标或商标。所有其它商标均是其各自所有者的财产。

■ 环保说明

产品中有毒有害物质或元素的名称及含量标识表

部件名称	有毒有害物质或元素									
	铅 (Pb)	汞 (Hg)	镉 (Cd)	六价铬 (Cr(VI))	多溴联苯 (PBB)	多溴二苯醚 (PBDE)	邻苯二甲酸二正丁酯 (DBP)	邻苯二甲酸二异丁酯 (DIBP)	邻苯二甲酸丁基苄酯 (BBP)	邻苯二甲酸二(2-乙基)己酯 (DEHP)
塑料部件	○	○	○	○	○	○	○	○	○	○
金属部件	×	○	○	○	○	○	○	○	○	○
电路板组件	×	○	○	○	○	○	○	○	○	○
线缆	×	○	○	○	○	○	○	○	○	○

本表格依据SJ/T 11364的规定编制。

○ ：表示该有害物质在该部件所有均质材料中的含量均在 GB/T 26572规定的限量要求以下。

× ：表示该有害物质至少在该部件的某一均质材料中的含量超出 GB/T 26572规定的限量要求。

此标志为产品的环保使用期限标志，
且此标保使用期限只适用于产品正常工作的温度和湿度等条件。

注意事项：

1. 本单为保修凭证，请用户妥善保管，如有遗失，恕不保修或退换。
2. 保修期限制：购买之日起十二个月内。
3. 除了不可抗力事件损坏外，由本公司负责，免费维修。
4. 如属保管不善或使用不当造成的损坏，维修点将酌情收费。
5. 擅自拆卸维修者，不予保修。
6. 以上保修条款仅限于中国市场适用（不包含港澳台地区）。

产品服务保证书

姓名：_____ 电话：_____ 地址：_____

商品：_____ 型号：_____ 购买日期：_____ 年___月___日

维修记录栏（由维修员填写）	维修员签名	日期

◆广东得胜电声有限公司 ◆电话：400-6828-333 ◆地址：中国广东省惠州市博罗县龙溪街道夏寮村委会大门村夏照（得胜创业园）

■ Preface

Dear Customer,

Thank you for purchasing Takstar ME30 Megaphone. Read this manual thoroughly for proper use.

If you have any questions or suggestions, please contact our local sales service.

■ Features

- Innovative compact design, lightweight & comfortable grip for long-hour handheld amplification and karaoke.
- 30W peak full-range speaker, wide frequency, rich bass, loud and clear sound.
- High-sensitivity mic capsule for easy pickup, loud output and vocal protection.
- Built-in 4000mAh lithium battery provides up to 20h of battery life.
- Built-in DSP module effectively eliminates audio feedback.
- One-touch switching between megaphone and karaoke modes, simple operation.
- Supports wireless playback, simplifying connections for cable-free music enjoyment.
- 300s built-in & USB recording for promotions and voice announcements.
- HD display shows key info (battery level, volume, etc.) at a glance.
- Energy-saving design with auto power-off after 15 minutes of inactivity.

■ Applications

- Suitable for crowd control, government and enterprise institutions, security patrols, tour guiding, promotional outdoor events.

Package Contents

1 × ME30 Megaphone
1 × Type-C Charging Cable
1 × Wrist Lanyard
1 × User Manual

Specifications

Main Unit Specifications

- Frequency Response: 150Hz-12kHz
- Peak Power: 30W
- Speaker Impedance: 4Ω
- THD: ≤5% 1kHz@4R, 4W
- SNR: 80dB (A-Weighted) @1W 4Ω
- Main Chip: DSP
- Wireless Version: V5.3
- Reverb Mode: Reverb
- Operating Voltage: 3.4V-4.2V
- Battery Type: Lithium-ion
- Battery Capacity: 3.7V/4000mAh
- Charging Method: 5V⎓1A
- Charging Time: Approx. 4 hours
- Operating Voltage Range: 3.4V-4.2V
- Operating Time: Approx. 20hours (megaphone mode)
- Product Weight: Approx. 350g
- Product Dimensions: Φ189mm×99mm×196mm

Microphone Capsule Specifications

- Pickup: Back-electret Condenser
- Polar Pattern: Supercardioid
- Frequency Response: 60Hz-16kHz
- Sensitivity: -42±2dB (0dB=1V/Pa, at 1kHz)

Note: The above data are measured by Takstar laboratory which has the final interpretation right!

■ Function Descriptions

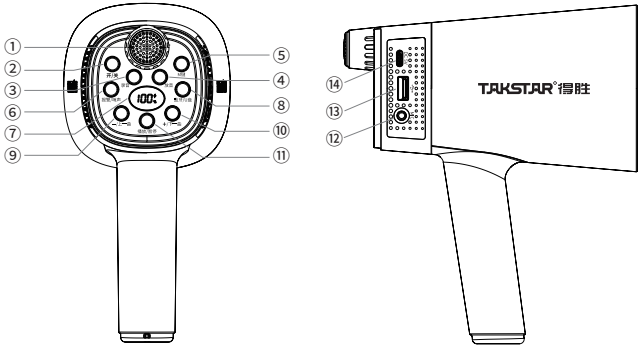

① Microphone: Speak directly into it during use; maintain a pickup distance of 10-20mm.

② Power Switch: Long press for 2s to power on/off; double press to enable/disable the microphone; auto power-off after 15 minutes of inactivity in any mode.

③ Recording Button: Press to enter recording mode; refer to the User Manual for detailed operations in the "Recording & Playback Functions" section.

④ Playback Button: Press to play recorded content in a loop after recording is completed.

⑤ Mode Switch Button: Cycle through 3 modes (Megaphone, Speech, Karaoke) with corresponding voice prompts (factory default: Megaphone mode; remembers last mode on next startup).

⑥ Alarm/Whistle: Short press to toggle between alarm and whistle, press again to turn off.

⑦ Digital Display: Shows real-time battery percentage, volume level and working status.

⑧ Bluetooth/USB Button: Press to enable/disable Bluetooth; long press to disconnect Bluetooth; press to switch between Bluetooth/USB playback when USB drive is

inserted (display shows BL/UP accordingly).

⑨ -/Previous Track Button: Press to decrease volume; long press to switch to previous track.

⑩ +/Next Track Button: Press to increase volume; long press to switch to next track.

⑪ Play/Pause Button: Short press to play or pause audio. In USB mode, long press to switch between Single/Loop playback modes.

⑫ MIC Input Jack (Ø3.5mm): Supports external microphone connection; built-in microphone auto-disables once connected.

⑬ USB Drive Jack: Insert a USB drive to play audio files or use the recording function.

⑭ Type-C Charging Jack: Connect Type-C charging cable to charge the megaphone.

Note: When playing music or recording, the microphone may be turned off without speaking to avoid audio feedback.

■ Operating Instructions

I. Wireless Playback Pairing Method

When using the wireless connection function for the first time, you need to pair it with a mobile phone or other smart devices. The steps are as follows:

1. Press the "Bluetooth/USB Button" to turn on the wireless function. The screen will display a flashing "BL".
2. Open your phone's Settings menu, enable wireless playback, search for "TAKSTAR ME30" and tap to connect. A prompt tone will sound upon successful connection.
3. On subsequent startups, if a device has been paired before, the megaphone will automatically reconnect to the last used device.

II. Recording & Playback Function Instructions

1. Internal Recording/Playback

Press the "Recording Button". The display flashes "RC" twice with a beep, entering

recording mode. The recording timer counts down from 05(5 minutes/300 seconds) to 00, at which point recording ends automatically, saves,and enters loop playback. During recording, press the "Recording Button" or "Playback Button" again to stop recording early and switch to loop playback.

Note: Only one audio file can be stored in internal recording. A new recording will overwrite the previous file.

2. External USB Recording/Playback

With a USB drive inserted, press the "Recording Button" to enter recording mode. After the display flashes "RC" twice, recording starts and the duration is displayed. During recording, press the "Recording Button" or "Playback Button" again to stop recording early and switch to loop playback.

Note: Multiple audio files can be saved to an external USB drive. Storage capacity depends on the USB drive used. Supports up to 64GB.

III. Charging and Battery Indication

State	Screen Display
Power On	Charging: Screen displays CH and symbol ⚡ flashes.
	Fully Charged: Symbol ⚡ stays on constantly; battery level shows 100%.
Power Off	Charging: Symbol ⚡ flashes.
	Fully Charged: Symbol ⚡ stays on constantly.

■ Safety Instructions

To avoid electric shock, overheat, fire, radiation, explosion, mechanical risk and injury or property loss due to improper use, please read and observe the following items before use:

1. Please check if the power of the connected equipment matches with that of this product before operation. Adjust the volume to proper level during operation. Do not operate at over-power or high-volume level for extended time to avoid product malfunction.
2. If there is any abnormality during use (e.g., smoke, strange odor), please kill the power switch and unplug from power source, then send the product to the local after-sales service for repair.
3. Power adapter used, if any, should be approved by CCC certification or similar standards and comply with the power supply requirements.
4. Keep this product and its accessories in a dry and ventilated area. Do not store in a humid or dusty area for extended time. Keep away from fire, rain, liquid intrusion, bumping, throwing, vibrating, or from blocking any ventilation openings, to prevent malfunction.
5. The product must, when installed on walls or ceilings, be fixed firmly in place at adequate strength to prevent from falling.
6. Please abide by safety rules during operation. Do not use the product in places prohibited by laws or regulations to avoid accident.
7. Do not disassemble or repair the product unauthorized to avoid injury. If you have any questions or require any services, please contact our local after-sales service.

■ Label Meanings

This device is compliant with the limits of the European Council Directive on the approximation of the laws of the member states relating to electromagnetic compatibility according to RL2004/108/EG and European Low Voltage Directive RL2006/95/EG.

Note: This equipment has been tested and found to comply with the limits for a Class B digital device, pursuant to part 15 of the FCC Rules. These limits are designed to provide reasonable protection against harmful interference in a residential installation. This equipment generates, uses, and can radiate radio frequency energy and, if not installed and used in accordance with the instructions, may cause harmful interference to radio communications. However, there is no guarantee that interference will not occur in a particular installation.

If this equipment does cause harmful interference to radio or television reception, which can be determined by turning the equipment off and on, the user is encouraged to try to correct the interference by one or more of the following measures:

- Reorient or relocate the receiving antenna.
- Increase the separation between the equipment and receiver.
- Connect the equipment to an outlet on a circuit different from that to which the receiver is connected.
- Consult the dealer or an experienced radio/TV technician for help.

Changes or modifications not expressly approved by the complying party may cause the user to lose permission to operate the device.

This device complies with part 15 of the FCC Rules. Operation is subject to the following two conditions:

1) This device may not cause harmful interference, and

2) This device must accept any interference received, including interference that may cause undesired operation.

This symbol indicates that this product should not be disposed of with your household waste, according to the WEEE directive (2012/19/EU) and your national law. This product should be handed over to an authorized collection site for recycling waste electrical and electronic equipment (WEEE). Improper handling of this type of waste could have a possible negative impact on the environment and human health due to potentially hazardous substances that are generally associated with WEEE. At the same time, your cooperation in the correct disposal of this product will contribute to the effective usage of natural resources. For more information about where you can drop off your waste equipment for recycling, please contact your local city office, waste authority, or your household waste disposal service.

■ About This Manual

This manual contains up-to-date technical specifications as of printing. However, specifications contained herein may not conform to your particular product since Takstar is constantly improving its products. Also, specifications, devices or accessories available may vary from region to region. If you have any questions, please contact our local sales outlet. For the latest version/more information, please visit our website: https://www.takstar.com/

Copyright ©2026 TAKSTAR. TAKSTAR, 得胜 and their respective logos are registered trademarks or trademarks of Takstar company in the PRC, and/or other countries. All other trademarks are the property of their respective owners.

扫一扫，了解更多产品
Scan for more
product information

广东得胜电声有限公司制造

地址: 中国广东省惠州市博罗县龙溪街道夏寮村委会
大门村夏照（得胜创业园）
服务热线：400 6828 333 传真：0752 6383950
邮箱：xs@takstar.com
网址：www.takstar.com

Designed & Manufactured by:

Guangdong Takstar Electroacoustic Co., Ltd.
Address: Takstar Innovation Park, Xiazhao,
Damen Village, Xialiao Village Committee,
Longxi Street, Boluo County, Huizhou City,
Guangdong, P.R. China
Tel: 86 752 6383644 Fax: 86 752 6383952
Email: sales@takstar.com
Website: www.takstar.com